CB-3905YBH

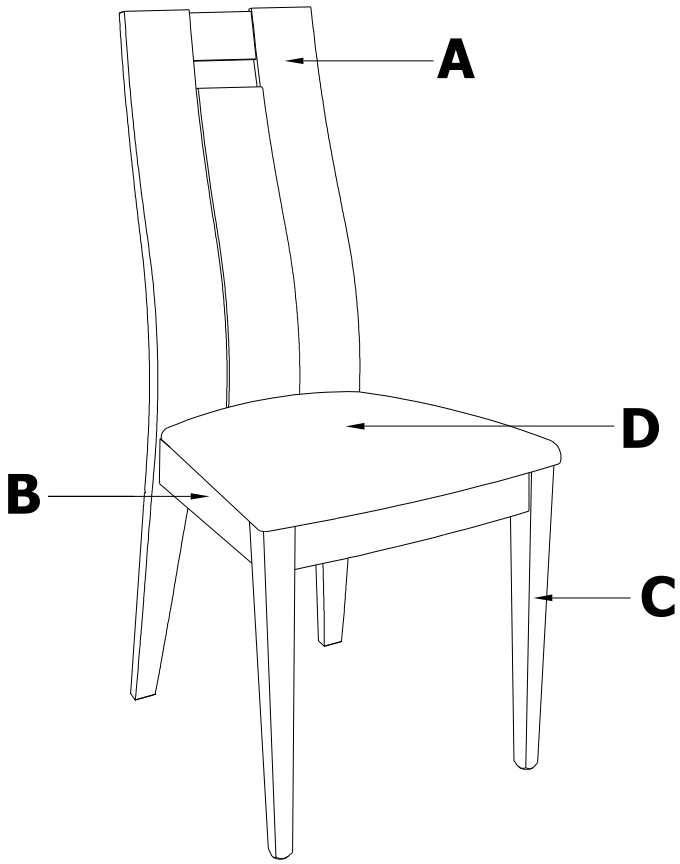

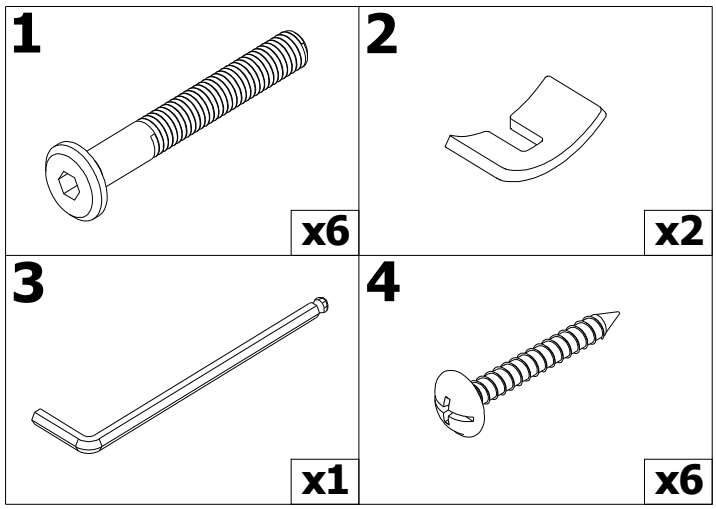

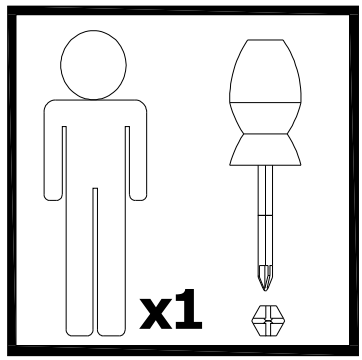

1

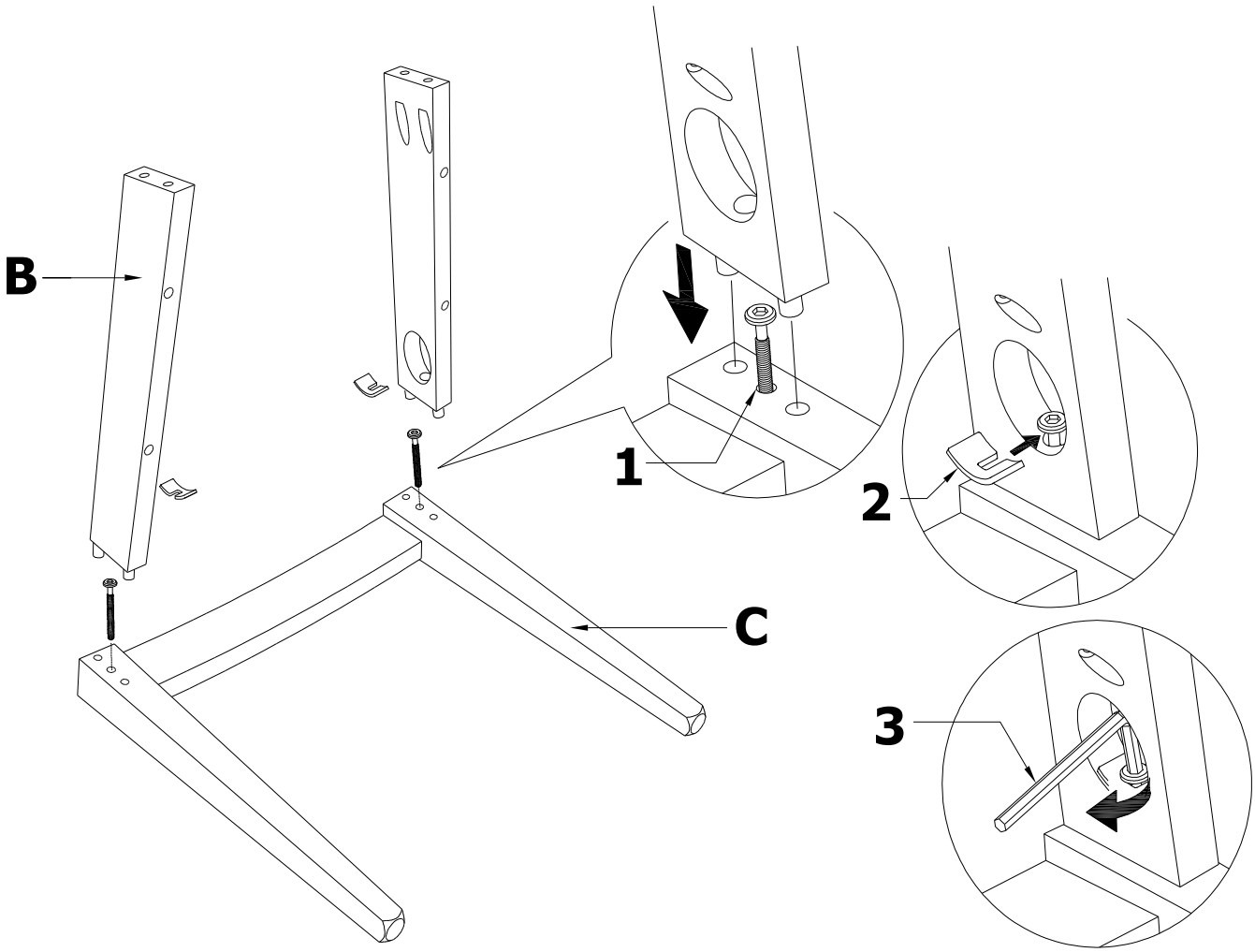

2

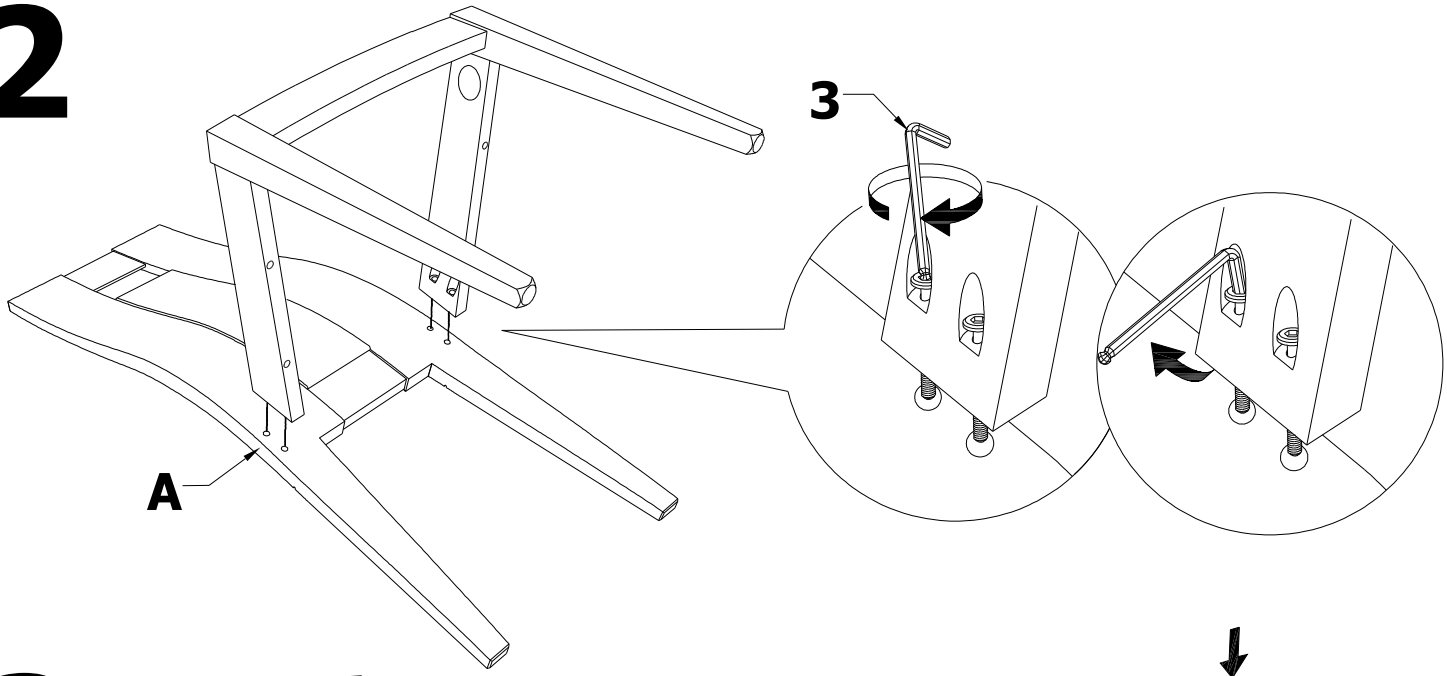

3

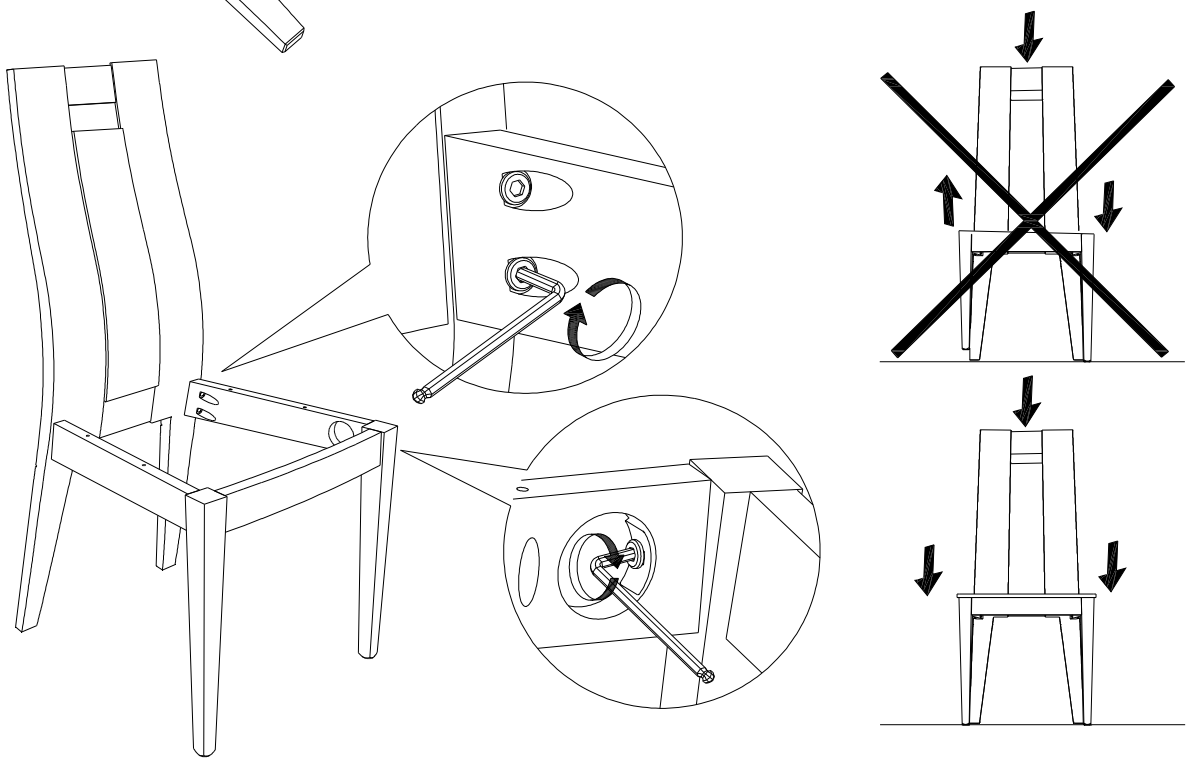
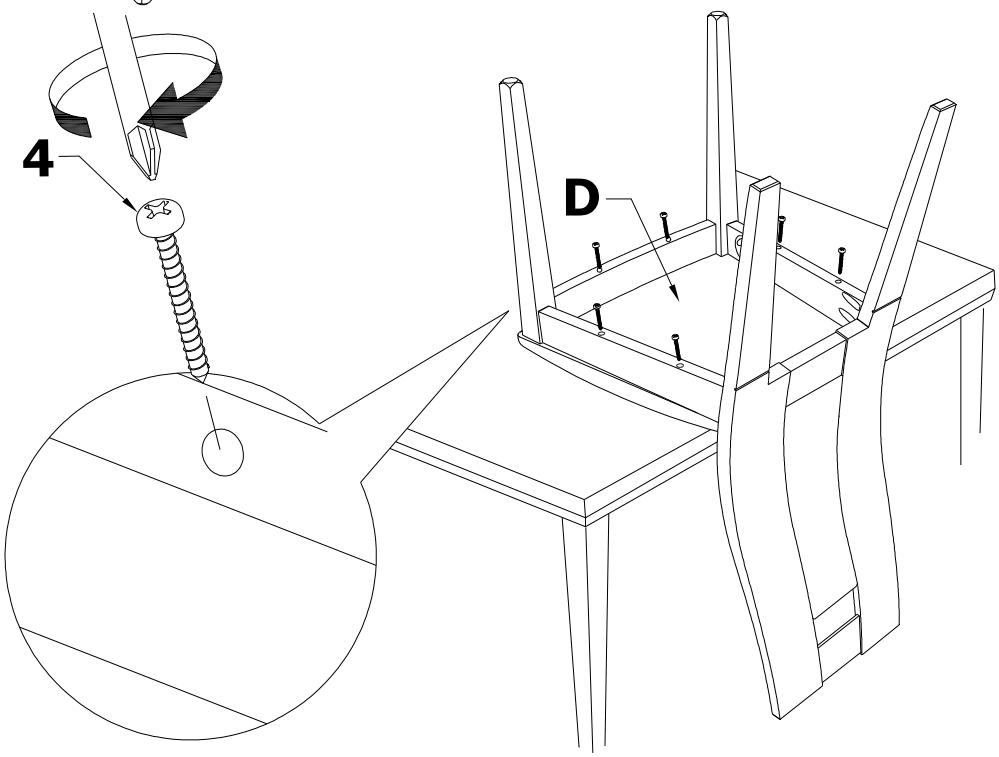
4