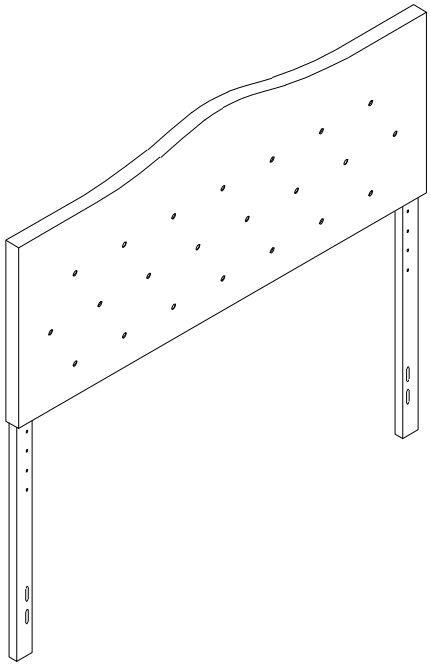

Thank you for your purchase!

Fabric Upholstered Tufted Headboard

ASSEMBLY INSTRUCTIONS

Before You Begin:
Please indentify all component parts and hardware pieces required before you begin. Carefully remove all of the components from the packaging and set aside for assembly. Assemble on a soft surface to prevent scratching during assembly.

Caution:
Tighten all components securely before use. Failure to do so may result in personal injury.
DO NOT use any sharp objects to open plastic wrapped components as damage to product or components may result.

Warning:

CHOKING HAZARD - Small Parts. Adult Assembly Required.

DO NOT ALLOW CHILDREN TO CLIMB ON FURNITURE

Serious or fatal injuries can occur from furniture tipping over. You must install Tipping Restraint Hardware (where included) to help prevent the unit from tipping and causing accidental injury, instability, death or damage. The tipping restraint is intended only as a safety measure, it is not a substitute for proper adult supervision.

To help prevent furniture from tipping over it must be permanently attached to the wall. Anti-Tip Safety Wall Straps suitable for the unit weight and wall materials (if not included) should be purchased and installed.

Customer Service email: CustomerExperience@belnick.com / phone: 866-552-2810

HG-HB1708-T-B-GG / HG-HB1708-T-BK-GG / HG-HB1708-T-C-GG / HG-HB1708-T-DBR-GG / HG-HB1708-T-DG-GG / HG-HB1708-T-LG-GG / HG-HB1708-T-N-GG / HG-HB1708-T-R-GG / HG-HB1708-T-W-GG / HG-HB1708-F-B-GG / HG-HB1708-F-DG-GG / HG-HB1708-F-LG-GG / HG-HB1708-F-N-GG / HG-HB1708-F-R-GG / HG-HB1708-F-W-GG / HG-HB1708-F-BK-GG / HG-HB1708-F-C-GG / HG-HB1708-F-DBR-GG / HG-HB1708-Q-B-GG / HG-HB1708-Q-BK-GG / HG-HB1708-Q-C-GG / HG-HB1708-Q-DBR-GG / HG-HB1708-Q-DG-GG / HG-HB1708-Q-LG-GG / HG-HB1708-Q-N-GG / HG-HB1708-Q-W-GG / HG-HB1708-Q-R-GG
HG-HB1708-K-B-GG / HG-HB1708-K-BK-GG / HG-HB1708-K-DBR-GG / HG-HB1708-K-DG-GG / HG-HB1708-K-LG-GG / HG-HB1708-K-R-GG / HG-HB1708-K-W-GG / HG-HB1708-K-C-GG / HG-HB1708-K-N-GG

Have a Question/Concern?

Quality products and first-class customer service are the cornerstone of long-lasting consumer relationships. We strive toward excellence in all we do and want you to be completely satisfied with your purchase.

Please contact our exceptional Customer Experience Agents at the email address or phone number shown below to assist you with any product questions or issues before requesting a return.

We look forward to serving you in a friendly, efficient manner to resolve any issues you may have.

Customer Service Email: CustomerExperience@belnick.com

Customer Service Phone: 866-552-2810

Our Warranty Statement

This warranty covers manufacturing defects associated with your new product. The product is warranted from the original purchase date and to the original purchaser for normal usage, according to the below-referenced specifications and limitations.

- Non-moving metal parts are warranted for 5 years.
- Component parts including pneumatic cylinder, control mechanism, base and casters are warranted for 2 years.
- All other items are warranted for 1 year.

Normal usage means use in compliance with the restrictions and weight limits specified for the product. In the absence of product-specific restrictions and weight limits, normal usage means use for no more than forty hours per week by persons weighing 250 lbs. or less. Coverage terminates if the product is sold or otherwise transferred. Repairs made by parties other than Belnick also void this warranty.

This warranty will not cover: (1) labor, freight, or damage from misuse, abuse, negligence, alteration, assembly, installation, attachments, accident, vandalism, acts of nature or any other event beyond the control of Belnick; (2) tearing, scratching, scuffing, or blemishing of leather or fabric; (3) cosmetic damage that may result from normal usage; (4) damage attributable to use by persons exceeding specified weight limits or commercial use exceeding forty hours per week; or (5) rust or other damage caused by exposure to moisture. The user assumes all risk of injury resulting from use of this product. Liability for incidental or consequential damage is excluded. Some states do not allow the exclusion or limitation of incidental or consequential damages, so the above limitation or exclusion may not apply to you.

PARTS

1	Headboard 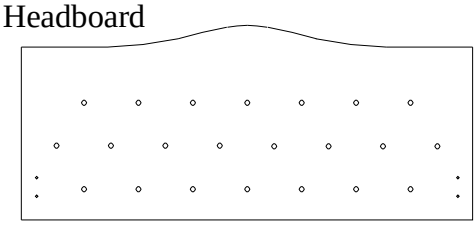	1PC
2	Legs	2PCS

A	Bolts M8x50		4PCS
B	Washers M8		4PCS
C	Allenkey K5		1PC
D	Bolts M6x70		4PCS

E	Washers M6		8PCS
F	Spring washers M6		4PCS
G	Nuts M6		4PCS
H	Allenkey K4		1PC

STEP 1: Headboard Assembly

Open cover on the back storage compartment of the Headboard and remove the legs.

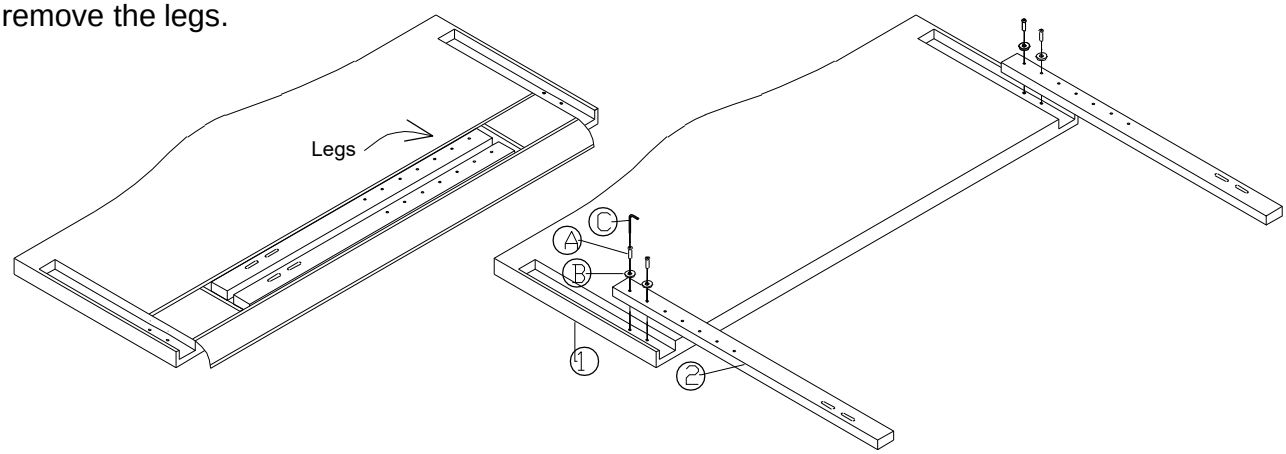

STEP 2: Assembly with Bedframe (Not Included)

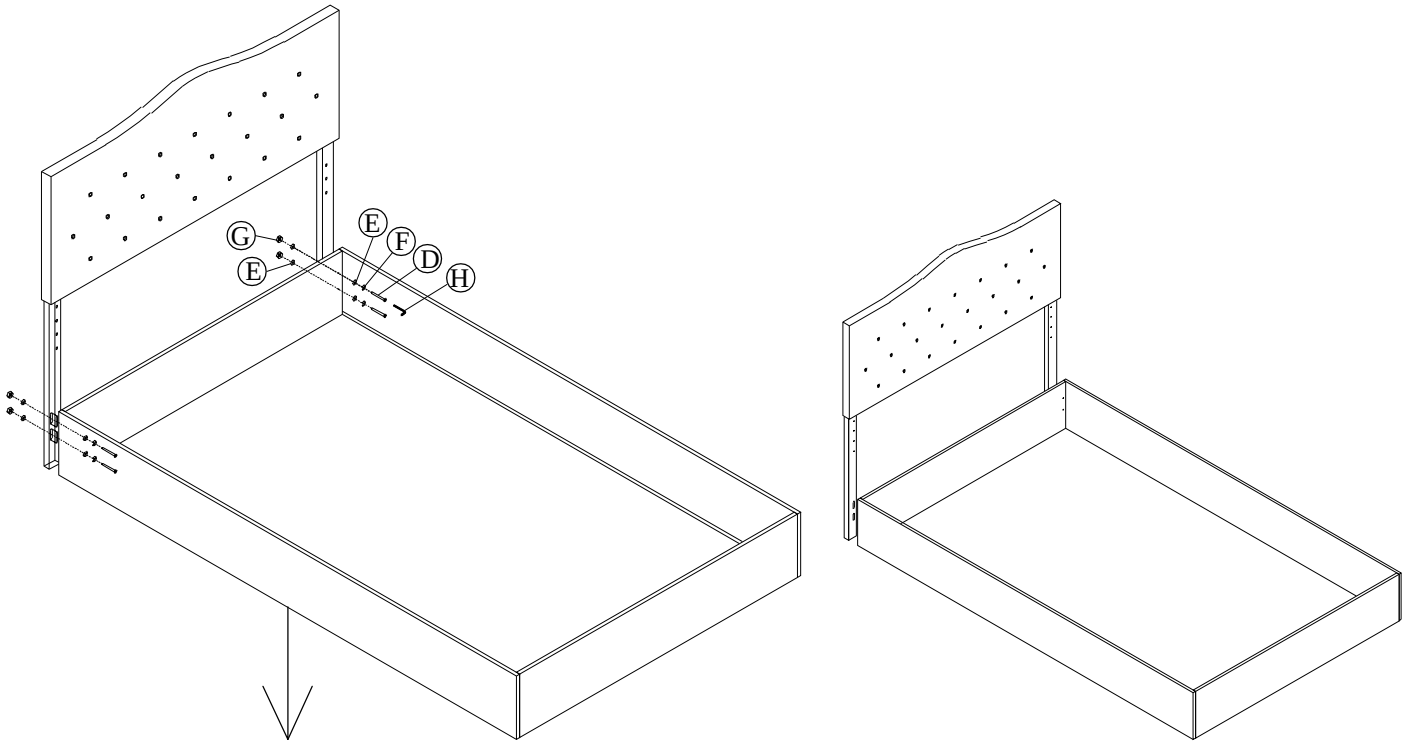

Note: Bedframe is not included.