LD-2025-
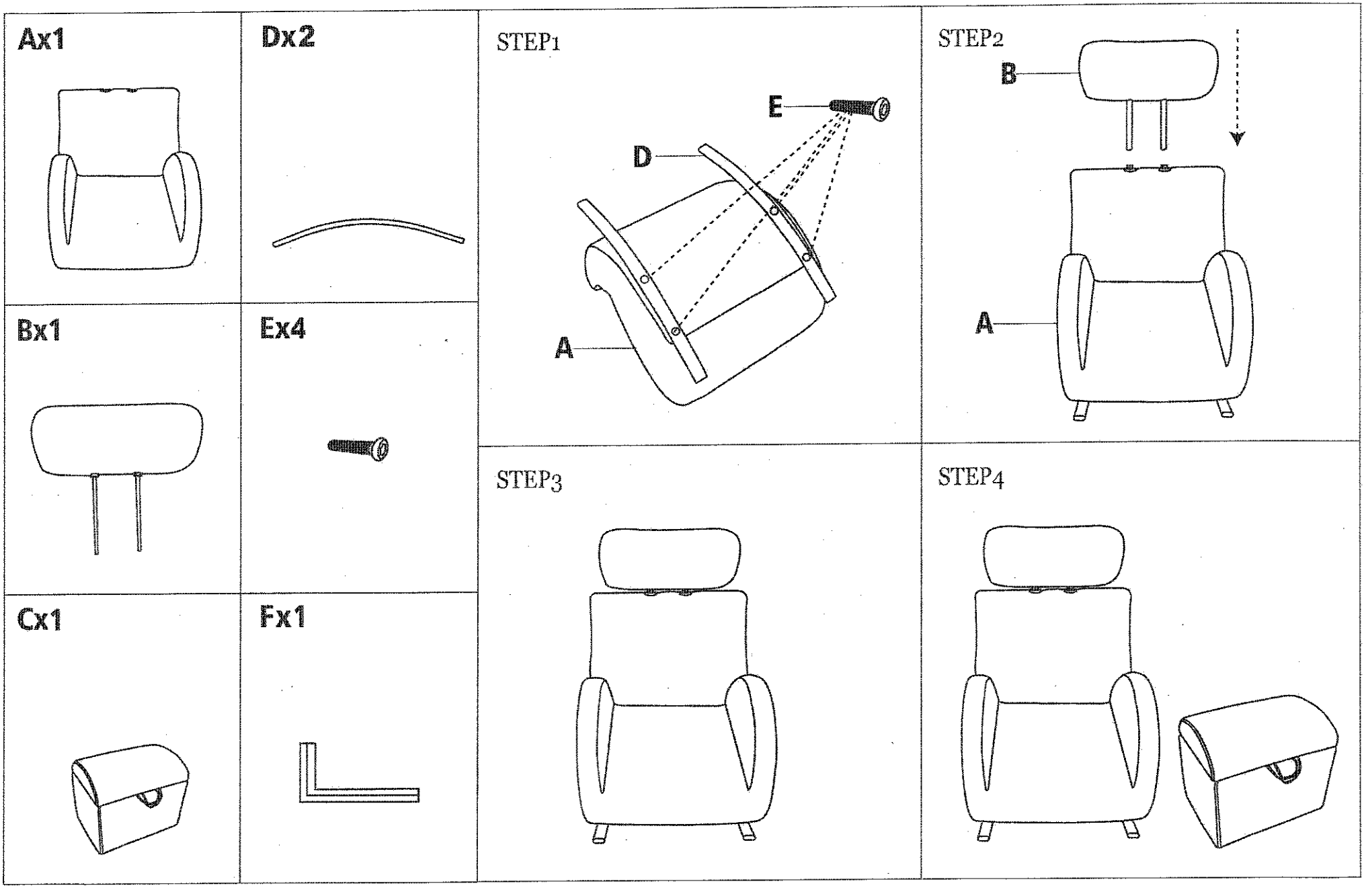
ASSEMBLY INSTRUCTION MADE IN CHINA