NAN-JH-1791ST-GG

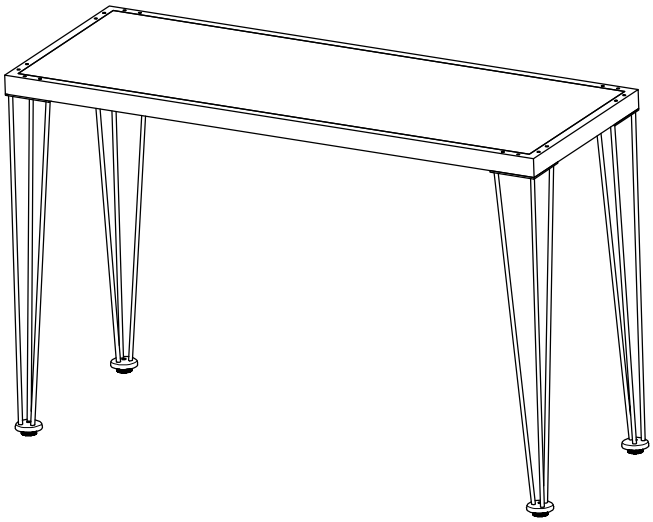

PARTS

①	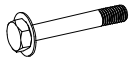	M6X50 16PCS
②		16PCS
③		4PCS

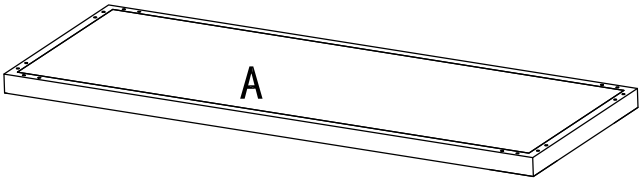

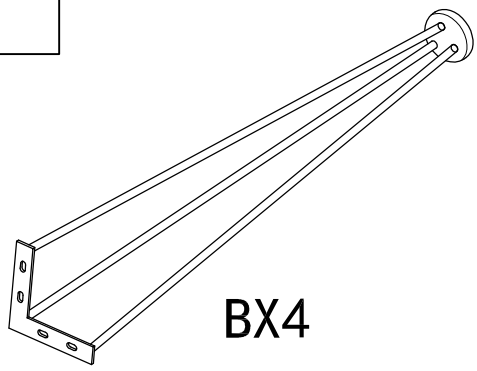

1

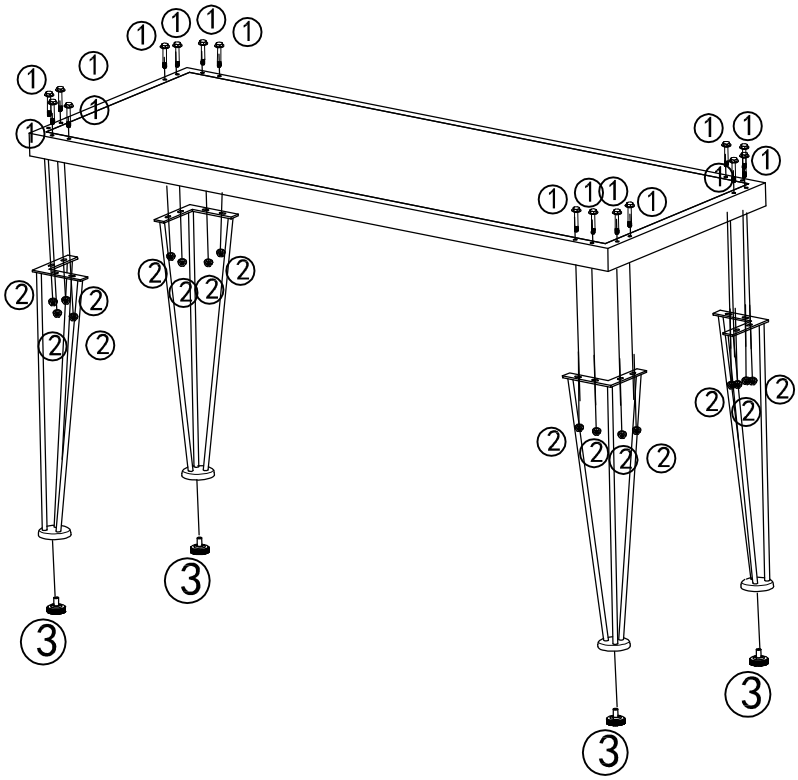

① X16

② X16

③ X4